OIP3000 series optical isolation probes

User Manual

For product support, visit:www.owon.com.hk/download

The illustrations, interface, icons and characters in the user manual may be slightlydifferent from the actual product. Please refer to the actual product.

Feb. 2025 edition V1.1.3

Copyright © LILLIPUT Company. All rights reserved.

The LILLIPUT's products are under the protection of the patent rights, including ones which have already obtained the patent rights and those which are applying for. The information in this manual will replace all materials published.

The information in this manual was correct at the time of printing. However, LILLIPUT will continue to improve products and reserves the rights to change specification at any time without notice.

OWON® is the registered trademark of the LILLIPUT Company.

Fujian LILLIPUT Optoelectronics Technology Co., Ltd.

No. 19, Heming Road

Lantian Industrial Zone, Zhangzhou 363005 P.R. China

Tel: +86-596-2130430 **Fax:** +86-596-2109272

Web: www.owon.com.cn **E-mail:** info@owon.com.cn

CATALOG

1.Introduction 2
2.Applications 2
3.Sprcifications 2
4.Characteristic 5
5. Functions 6
6.Operation 14
7.Packing list 15
8.Maintain 17
9.Maintenance 18

1.Introduction

Optical isolated voltage probe, has very high common-mode rejection ratio and isolation voltage, and very small loading effects and parasitic oscillation, shows the true signal within their bandwidth,it is the standard for determining the authenticity of signals measured by other voltage probes. This probe uses optical fiber to transmit signals, which can achieve photoelectric isolation of measurements, allowing the probe to float independently under common mode voltage.

2.Applications

- Design of motor drive, power converter, electronic ballast
- Mosfet, GaN, SiC, IGBT Half/Full bridge devices measurements
- Isolated measurement of high-voltage live signals such as high-voltage power supply
- Measurement of non-common ground high-frequency currents such as switching power supply
- High voltage, high bandwidth applications measurement
- Floating measurements

3.Sprcifications

Model	OIP3015	OIP3035	OIP3050	OIP3080	OIP3100
Bandwidth(-3dB)	DC-500 MHz	DC-350 MHz	DC-500 MHz	DC-800 MHz	DC-1GHz
Rise time	2.3ns	1ns	0.7ns	0.43ns	0.35ns
Output voltage	±2.5V	±2.5V	±1.25V	±0.5V	±0.5V
Isolation voltage	60kV	60kV	60kV	60kV	60kV
Accuracy(Typical)	1%+5mV				
Accuracy(Guarantee)	1.5%+5mV				
Noise	≤6mV RMS				
Terminal load	1MΩ	1MΩ	50Ω	50Ω	50Ω
Delay time	20 ns ± 0.1 ns (Standard 2m)				
Operating environment	0~40℃，≤85%RH，86kPa to106kPa				
Optical cable length	About 2 meters				
Power supply	Transmitter battery powered, operating time about 8 hours, standby time about 30 days; Input：AC100-240V,50/60Hz,350mAmax; Output: DC5V/2.1A				
Battery	Receiver: DC-5V; Transmitter: 3.7V lithium battery				

Attenuator

Probe model	Attenuator model	Ratio	Testing range	Input impedance
OIP3015 OIP3035	OPA3-10-1	10:1	±25V	10MΩ||4pF
	OPA3-20-1	20:1	±50V	11MΩ||3.3pF
	OPA3-50-1	50:1	±125V	11MΩ||3pF
	OPA3-100-1	100:1	±250V	11MΩ||3pF
	OPA3-500-1	500:1	±1250V	301MΩ||4.5pF
	OPA3-1000-1	1000:1	±2500V	301MΩ||4.3pF
OIP3050	OPA3-10-5	10:1	±12.5V	10MΩ||3.5pF
	OPA3-100-5	100:1	±125V	11MΩ||2.5pF
	OPA3-1000-5	1000:1	±1250V	31MΩ||4pF
	OPA3-2000-5	2000:1	±2500V	31MΩ||4pF
OIP3080 OIP3100	OPA3-10-8	10:1	±5V	10MΩ||3.5pF
	OPA3-100-8	100:1	±50V	11MΩ||2.5pF
	OPA3-1000-8	1000:1	±500V	31MΩ||4pF
	OPA3-5000-8	5000:1	±2500V	31MΩ||4pF

***1. When using the OIP3015 and OIP3035 models, the input impedance of the oscilloscope needs to be set to 1MΩ, and the attenuation ratio of the oscilloscope should be adjusted accordingly.

When using the OIP3050, OIP3080, and OIP3100 models, the impedance of the oscilloscope should be set to 50Ω, and the attenuation ratio of the oscilloscope should be adjusted accordingly.

2. To ensure the accuracy of the test, attenuators aren't universal between different models of optically isolated probes.

4.Characteristic

（1）Restore the real signal

Due to the long leads, the differential probe may cause problems when measure high-frequency signals, such as coupling the surrounding high dv/dt signals to make the test waveform inaccurate; The parasitic capacitance of a probe can cause the circuit under test to oscillate or even blow a tube. The optical isolated probe use attenuation input method, and its attenuation circuit is located at the front end of the probe, so that the input capacitance can be as low as 1pF, which can reduce the influence on the circuit under test. The attenuator uses coaxial transmission and has excellent dv/dt immunity. To restore a more realistic high-frequency signal.

（2）Easy and flexible operating

It has a high isolation voltage, and multi-channel measurement doesn’t need to consider the common ground, allowing each probe reference to be different point. Battery-powered, rated working time at least 8 hours. It is small, and the BNC interface is compatible with almost all oscilloscopes, making it easy to operate and highly compatible. The attenuator options can be replaced to suit different test needs and achieve the best signal-to-noise ratio.

（3）Temperature characteristics

Since it uses optical fiber to transmit signals, the photoelectric conversion devices involved are highly sensitive to temperature. As a result, the output accuracy will decrease with the increase in temperature. When tested in a laboratory environment at 26℃, the output will gradually decay after power-on if no calibration, as shown in the table below:

Running duration	Attenuation ratio
10 minutes	1.5%
20minutes	2%
≥30minutes	3%

5. Functions

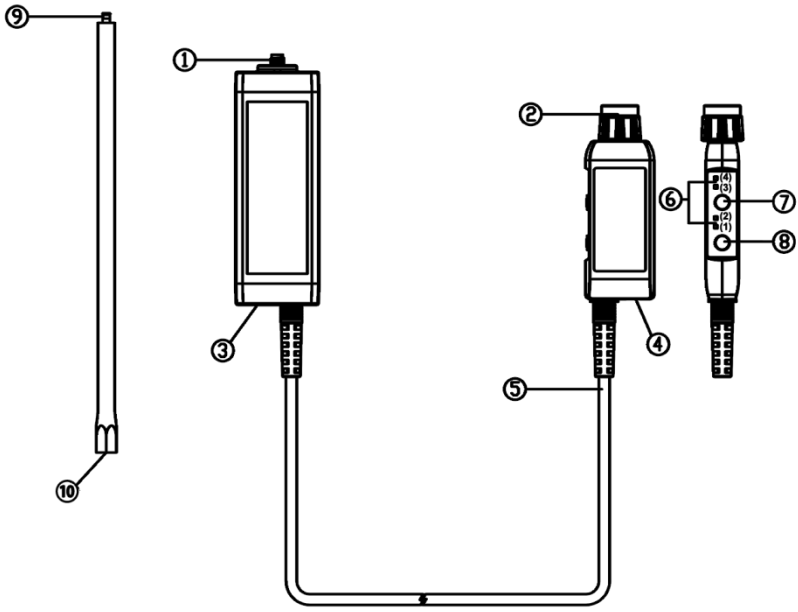

Taking the OIP3015 as an example:

① **Transmitter(Electrical-Optical Converter):** Connect with proper attenuator according to the tested voltage, when use the 10X standard attenuator, the measured voltage can be ±25V; battery charging is forbidden when the probe is working, the transmitter should be off status when battery charging.

② **Receiver(Optical-Electrical Converter)：** Connect output to oscilloscope, set the input impedance to 1MΩ, the output rated voltage is ±2.5V.

③ **Charging port:** A single charge provides 8 hours of use. The indicator light turns red when the battery is low, it flashes red while charging, and turns green when the battery is

fully charged. Don’t connect the charging cable while the probe is in use to prevent accidents.

NOTE: When the probe is turned on or connected to the circuit under test, don't charge the probe, as this may damage the probe or endanger personal safety**.**

④ **Power supply interface:**Use this port to make sure power supply is work when the receiver is connect with the oscilloscope.

⑤ **Optical fiber cable:** The inside of the cable is an optical fiber, which is made of glass, and it cannot be repaired if it is broken,please be careful when using.

⑥ **Indicator light:** Green.

Status of indicator light	Information displayed
3 and 4 on, 1 and 2 off	Calibrating
Full light	Working, battery power remaining ≥80%
1, 2, 3 on, 4 off	Working, remaining battery power ≥60%
1 and 2 on, 3 and 4 off	Working, battery remaining ≥40%
1 on, 2, 3, 4 off	Working, battery remaining ≥10%
1 flashing, 2, 3, 4 off	Working, battery remaining <10%

⑦ **Up Arrow Key:** Used for offset adjustment and waveform calibration. Double-click to fine-tune the waveform upward; press and hold to continuously adjust the waveform upward. Click to set the waveform to 0 as the as the baseline(cancel up/down movement).

Note: (OIP3015, OIP3035: Double-click to cancel the up/down movement of the waveform; single-click or long-press to adjust upward.)

⑧ **Down Arrow Key:** Double-click to fine-tune the waveform downward; press and hold to continuously adjust the waveform downward; single-click to calibrate the peak-to-peak value of the waveform. (For the OIP3015 and OIP3035, double-clicking calibrates the waveform, while single-clicking and pressing and holding adjust it upward.)

⑨ **Attenuator test end:** Note that when using different attenuators, don't exceed their maximum input voltage during testing. Taking an attenuator with an X10 setting as an example, the maximum input voltage is ±12.5V, and the input capacitance is approximately 3.5pF. When testing high frequency, use adapters with low parasitic capacitance as much as possible.

⑩**Attenuator connection end:**Connect to the transmitter.

NOTES:

⑴When use or storage, Optical fiber cable's bending radius can't be less than 10cm, and also need to avoid shaking.

⑵Move away the receiver's power supply when charging the battery,max.charging current is 1A,full charging takes about 4hours.(The OIP3015 and OIP3035 take 6 hours to charge.)

⑶The receiver sends out a sound guidance: 2 sounds when the power is on, 4 sounds when it is not working normally, and when low battery,sounds all the time.

Please use the standard Type-C cable to charge the transmitter (electrical-to-optical converter) via its Type-C socket.



Charging port(charging during testing is prohibited)

Connect the attenuator:

As shown in the figure below, screw the attenuator connection clockwise into the transmitter (electro-optical converter) connection until it is tightened.

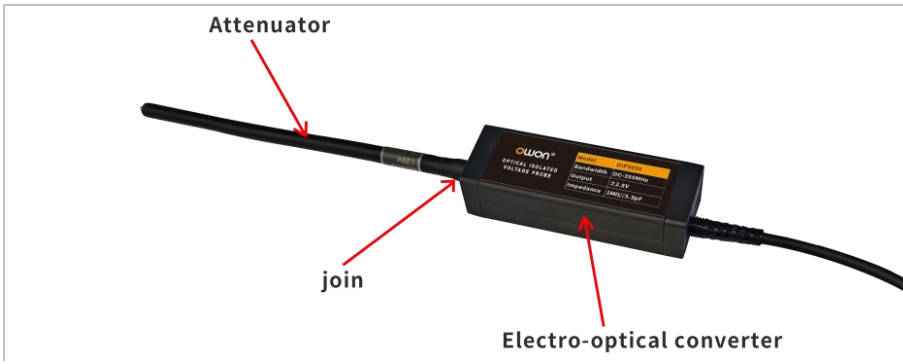

How to choose an attenuator:

Note: Please select the correct transmitter (electro-optical converter) end attenuator to avoid damage to the transmitter or performance degradation due to overvoltage. Please select the transmitter end attenuator with the lowest attenuation allowed by the measured signal range.

The attenuator should be selected according to the peak voltage (or RMS voltage) of the signal to be measured, please refer to the technical specifications to select the appropriate attenuator.

Notes and Requirements

Measurement System Handling Considerations

The optical isolation probe contain high-quality components, should be treated with care to avoid damage or degradation due to mishandling. Consider the following precautions when handling fibre optic cables and transmitter (electro-optical converter) end connections:

- Do not press heavy objects on the fibre optic cable, such as accidentally running over the cable with a chair wheel or dropping heavy objects onto the cable.
- When disassembling and moving the probe, please hold the main body of the probe, do not lift and pull the fibre optic cable to avoid breaking the cable by external force.
- The bending radius of the optical fibre must not be less than 10cm, otherwise the optical fibre will be broken.

- Accidental dropping of the transmitter (electro-optical converter) and the receiver (optical-electrical converter) reducer may result in damage and misalignment of the internal optical components.
- Please check the cable for damage, stop using it immediately if any damage occurs to the soft rubber sheath (as shown below).
- When not in use, store the optical isolation probe in its original way in the standard carrying case.

Installation

Usage steps

(1)Connect the receiver to the oscilloscope;

(2)Set the oscilloscope channel menu input impedance to 1MΩ, as well as set the corresponding attenuation multiplier and delay time;

(3)Connect the attenuator to the receiver;

(4)Power up with the standard Type-C receiver. The transmitter will automatically power up or powered down when the receiver is power up or powered down.

(5)Solder the MCX Connector to the target test board.

Note:

1) When testing the Vgs signal, the centre pin of the MCX Connector must be connected to the G terminal of the

MOSFET.

2) Please solder the MCX Connector directly to the test point, try not to lead the wires, otherwise it will have a large impact on the test results.
3) For ease of soldering, just cut off three of the four pins around the Connector and keep one.

10X,20X,100X,200X attenuator connection type:

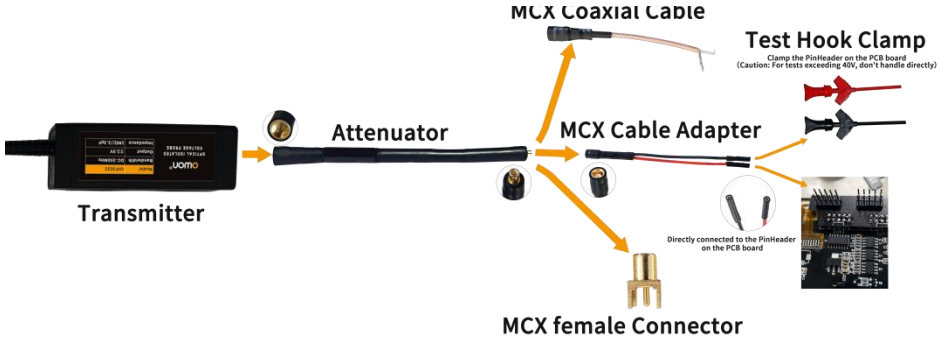

Note: When testing voltage exceeding 40V using test hook clamps, don't handle them directly with your hands.

500X,1000X attenuator connection method:



Caution: Don't insert other devices into the MCX inner pin of the attenuator, as this may damage the attenuator.

4) .Insert the MCX male connector of the attenuator into the MCX female socket; a ‘click’ will indicate a successful connection.
5) .Power up the target test board;
6) .Adjust the oscilloscope settings, test normally.

6.Operation

Attention: Please use our standard accessories for power supply and connection, test, keep a certain distance between the receiver and the transmitter, read the manual before use.

⑴Evalutae tested voltage value, choose proper attenuator.

⑵Receiver connect the USB port with our enclosed power cable, erect the transmitter wit the bracket.

⑶Do autozero adjusting if necessary.

⑷Connect the probe to oscilloscope, set the attenuation ratio and sensitivity accordingly.

⑸ Use the attenuator to connect with the tested circuit,start testing.

⑹ Remove the probe after measurement and cut off the circuit.

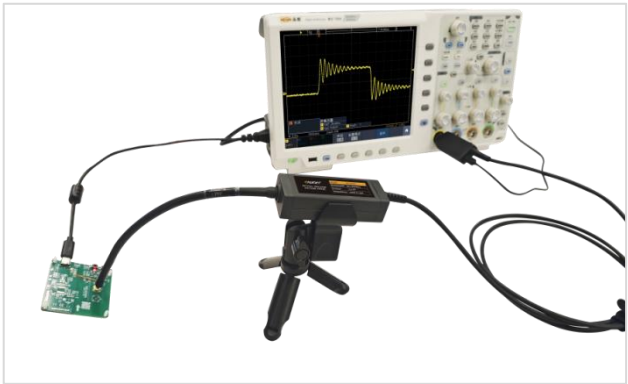

Mechanical specifications:

Probe size	Emitter	111.5*27.6*39mm
	Receiver	32*90.2*19.4mm
Attenuator length		20±2cm
Cable length		2m±5cm
Probe weight		220g±10g

unit：mm

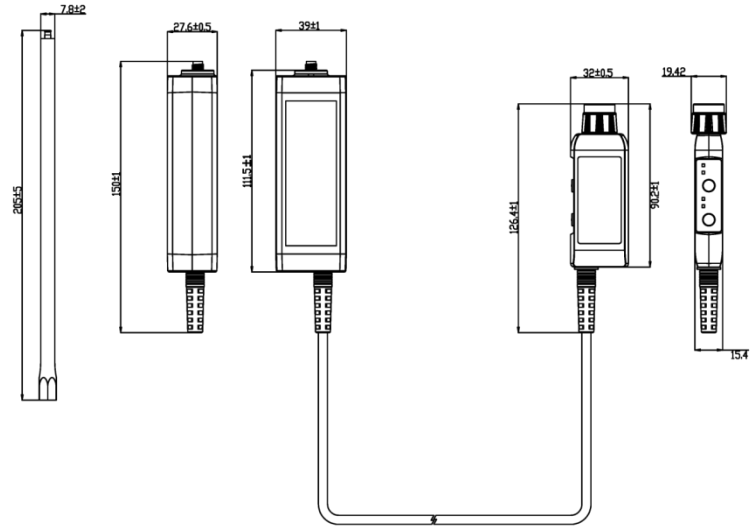

7.Packing list

Optical isolated probe	1 pc
Attenuator(10X)	1 pc

MCX Coaxial Cable	2 pc
MCX Cable Adapter	1 pc
Test Hook Clamp	2 pcs
MCX Female Connector	5 pc
Adapter	1 pc
Overhead Fixed Bracket	1 pc
5.08 Wire Converter (Optional)	2 pc

Trouble clearing

The LED status light on the probe indicates the current status of the probe. If the probe's LED status light does not emit the expected light, or if some of the probe's functions are not working properly, errors may exist. See the table below:

Fault phenomenon	Possible causes and solutions
Test amplitude not as expected	a. The input signal may be out of the oscilloscope display range; b. Ensure that the input signal is within the range;
Errors in DC measurements	a. Is there any zero drift in the oscilloscope or probe itself, please zero the device before measurement.; b. Check that the oscilloscope is AC coupled.; c. Adjust the time base of the oscilloscope to more than 1ms; d. DC measurements should observe the average value displayed by the oscilloscope;

Signal noise is so high that weak signals can't be measured accurately	a. Choose an attenuator with lower attenuation; b. Ensure that the oscilloscope channel attenuation is consistent with the probe; c. Set the vertical scale of the oscilloscope to a smaller value; d. Pay attention to the ground noise of the oscilloscope and the probe itself;
No signal is captured, the waveform is a straight line at the zero point	a. Detecting oscilloscope coupling settings; b. Check that the probe is powered on;

8.Maintain

- Do not expose the probe to harsh weather conditions, the probe is not waterproof.

NOTE: The probe is not waterproof, to prevent damage to the probe, do not expose it to sprays, liquids, or solvents. Avoid wetting the interior when performing external cleaning of the probe.

- Do not wipe the probe with chemical cleaners, they may damage the probe.
- Clean the outer surface of the probe with a soft, dry, non-linting cloth or soft-bristled brush.

- When not in use, store the optical isolation probe in its original way in the standard carrying case.

9.Repair service

Any repairs, maintenance or replacement parts that are outside of the warranty, please return the product to the original manufacturer for repair.